String Theory – Final Exam Solution

Lecturer: Timo Weigand

Janosh Riebesell, February 15th, 2016

1 RNS Superstring

The Polyakov action for an n-dimensional membrane in flat d-dimensional spacetime is given by

$$S_{\mathrm{P}}[X] = -\frac{1}{2\pi}\int_{\Sigma} \mathrm{d}\tau \mathrm{d}^n\sigma \sqrt{-h} h^{ab}\partial_a X^\mu \partial_b X_\mu, \tag{1}$$

with $h = \det(\boldsymbol{h})$.

a) Show how $S_{\mathrm{P}}[X]$ transforms under the Weyl rescaling

$$h^{ab} \to \Omega^{-1}(\sigma) h^{ab} \tag{2}$$

and argue why the string as a one dimensional object is special in the sense that higher dimensional objects will not lead to a similar theoretical structure.

b) Interpret the appearance of a tachyon from a field theoretic perspective.

c) What is a Majorana spinor?

Consider the RNS superstring action in conformal gauge

$$S_{\mathrm{RNS}} = -\frac{1}{16\pi}\int_{\Sigma} \mathrm{d}\tau\, \mathrm{d}\sigma \Big(\frac{2}{\alpha'}\partial_a X^\mu \partial^a X_\mu + 2i\bar{\psi}^\mu \gamma^a \partial_a \psi_\mu \Big), \tag{3}$$

where ψ^μ is a d-plet of Majorana fermions and the matrices γ^a, $a \in \{0,1\} \equiv \{\tau, \sigma\}$ are given by

$$\gamma^0 = \begin{pmatrix} 0 & 1 \\ -1 & 0 \end{pmatrix}, \qquad \gamma^1 = \begin{pmatrix} 0 & 1 \\ 1 & 0 \end{pmatrix}. \tag{4}$$

With respect to this basis write $\psi^\mu = \left(\psi^\mu_+, \psi^\mu_-\right)^{\mathrm{T}}$. Let $\epsilon = \left(\epsilon_+, \epsilon_-\right)^{\mathrm{T}}$ be an anticommuting infinitesimal Majorana spinor.

d) Introduce lightcone coordinates $\xi^\pm = \tau \pm \sigma$ and show that the closed string action S_{RNS} is invariant under the SUSY transformation

$$\delta X^\mu = i\sqrt{\frac{\alpha'}{2}}\,\bar{\epsilon}\psi^\mu, \tag{5}$$

$$\delta\psi^\mu = \frac{1}{2}\sqrt{\frac{2}{\alpha'}}\,\gamma^a \partial_a X^\mu \epsilon. \tag{6}$$

Hint: Use the equation of motion and the chiral condition $\gamma^b\gamma^a\partial_b\epsilon(\xi) = 0$.

Consider the boundary conditions

$$\psi_+\delta\psi_+ - \psi_-\delta\psi_-|_{\sigma=0} \overset{!}{=} \psi_+\delta\psi_+ - \psi_-\delta\psi_-|_{\sigma=l} \tag{7}$$

e) State the two string solutions corresponding to these boundaries.

f) Give the four sectors of these boundaries and name if they are bosonic or fermionic.

a) There are only two quantities in the Polyakov action (1) affected by the Weyl rescaling (2): The metric h^{ab} itself and its determinant h,

$$\sqrt{-h} \xrightarrow{(2)} \sqrt{-h'} = \sqrt{\det(\boldsymbol{h}')} = \sqrt{\det[\Omega(\sigma)\boldsymbol{h}]} = \Omega^{\frac{n+1}{2}}(\sigma)\sqrt{\det(\boldsymbol{h})} = \Omega^{\frac{n+1}{2}}(\sigma)\sqrt{-h}. \tag{8}$$

Thus the whole action Weyl rescales as

$$S_{\mathrm{P}}[X] \xrightarrow{(2)} S'_{\mathrm{P}}[X] = -\frac{1}{2\pi}\int_{\Sigma} \mathrm{d}\tau\mathrm{d}^n\sigma\Omega^{\frac{n+1}{2}}(\sigma)\sqrt{-h}\Omega^{-1}h^{ab}\partial_a X^\mu \partial_b X_\mu. \tag{9}$$

Precisely for the case $n = 1$ of a one-dimensional membrane, i.e. a string, do we recover the original Polyakov action. In this sense, strings are special as their theory enjoys symmetries not encountered with higher-dimensional objects.

b) The tachyonic ground state encountered in bosonic string theory is entirely due to the normal-ordering ambiguity that arises when moving from the classical to the quantum theory.

It is important to note here that quantum fields with tachyonic states are not at all inconsistent. They merely indicate an instability of the vacuum.

Note: A confirmed real-world example of a quantum field that assumes tachyonic states is the scalar Higgs field φ. Its potential is given by

$$V(|\varphi|) = \lambda(|\varphi|^2 - v)^2, \qquad \varphi \in \mathbb{C}, \quad \lambda, v \in \mathbb{R}_+, \tag{10}$$

which looks like

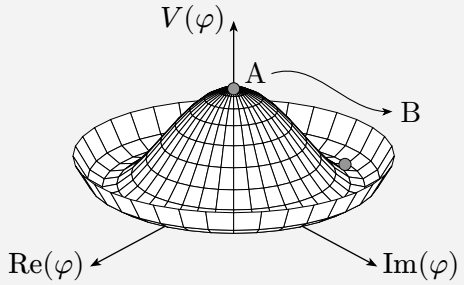

As the image illustrates, the field is unstable at $\varphi = 0$ and will, at the slightest perturbation, condense into its true vacuum. Setting the derivative equal to zero,

$$\partial_{|\varphi|}V(|\varphi|) = 4\lambda\,|\varphi|\,(|\varphi|^2 - v) \overset{!}{=} 0 \qquad \Rightarrow \qquad |\varphi| = 0 \text{ or } |\varphi| = \sqrt{v}. \tag{11}$$

we find that the vacuum lies anywhere on the circle $|\varphi| = \sqrt{v}$. From the sketch, we know that the other extremum at $|\varphi| = 0$ is a maximum, rendering the second derivative, and consequently the mass of the field at this point, negative.

$$m_\varphi^2|_{\varphi=0} = \partial^2_{|\varphi|}V(|\varphi|)|_{\varphi=0} = 12\lambda\,|\varphi|^2 - 4\lambda v|_{\varphi=0} = -4\lambda v < 0. \tag{12}$$

It is at this point still unclear if the same occurs in string theory in the sense that the bosonic string is related, by tachyon condensation, to the superstring theory.

c) A Majorana spinor ψ is one that fulfills the Majorana condition $\psi^* = \psi$, i.e. is real.

d) The Jacobian of the transformation $\begin{pmatrix}\tau\\ \sigma\end{pmatrix} \to \begin{pmatrix}\xi^+\\ \xi^-\end{pmatrix} = \begin{pmatrix}\tau+\sigma\\ \tau-\sigma\end{pmatrix}$ from worldsheet to lightcone coordinates has determinant

$$|\det(\boldsymbol{J})| = \left|\det\begin{pmatrix}\partial_\tau\xi^+ & \partial_\sigma\xi^+\\ \partial_\tau\xi^- & \partial_\sigma\xi^-\end{pmatrix}\right| = \left|\det\begin{pmatrix}1 & 1\\ 1 & -1\end{pmatrix}\right| = 2. \tag{13}$$

Hence, $\partial_\tau \pm \partial_\sigma = 2\partial_{\xi^\pm} \equiv 2\partial_\pm$ and the bosonic term in the RNS action (3) becomes[1]

$$\begin{aligned}\partial_a \boldsymbol{X}\cdot\partial^a\boldsymbol{X} &= \partial_\tau \boldsymbol{X}\cdot\partial^\tau\boldsymbol{X} + \partial_\sigma\boldsymbol{X}\cdot\partial^\sigma\boldsymbol{X} = \partial_\tau\boldsymbol{X}\cdot h^{\tau b}\partial_b\boldsymbol{X} + \partial_\sigma\boldsymbol{X}\cdot h^{\sigma b}\partial_b\boldsymbol{X}\\ &\overset{h=\left(\begin{smallmatrix}-1&0\\0&1\end{smallmatrix}\right)}{=} -\partial_\tau\boldsymbol{X}\cdot\partial_\tau\boldsymbol{X} + \partial_\sigma\boldsymbol{X}\cdot\partial_\sigma\boldsymbol{X} = -(\partial_\tau+\partial_\sigma)\boldsymbol{X}\cdot(\partial_\tau-\partial_\sigma)\boldsymbol{X} = -4\partial_+\boldsymbol{X}\cdot\partial_-\boldsymbol{X},\end{aligned} \tag{14}$$

while for the fermionic term, we get

$$\begin{aligned}\bar{\psi}\gamma^a\cdot\partial_a\psi &= \bar{\psi}\gamma^\tau\cdot\partial_\tau\psi + \bar{\psi}\gamma^\sigma\cdot\partial_\sigma\psi\\ &\overset{(16)}{=} \overbrace{(-\psi_-,\psi_+)\begin{pmatrix}0&1\\-1&0\end{pmatrix}}^{(-\psi_+,-\psi_-)}\cdot\partial_\tau\begin{pmatrix}\psi_+\\\psi_-\end{pmatrix} + \overbrace{(-\psi_-,\psi_+)\begin{pmatrix}0&1\\1&0\end{pmatrix}}^{(\psi_+,-\psi_-)}\cdot\partial_\sigma\begin{pmatrix}\psi_+\\\psi_-\end{pmatrix}\\ &= -\psi_+\cdot\partial_\tau\psi_+ - \psi_-\cdot\partial_\tau\psi_- + \psi_+\cdot\partial_\sigma\psi_+ - \psi_-\cdot\partial_\sigma\psi_-\\ &= -\psi_+\cdot(\partial_\tau-\partial_\sigma)\psi_+ - \psi_-\cdot(\partial_\tau+\partial_\sigma)\psi_-\\ &= -2\psi_+\cdot\partial_-\psi_+ - 2\psi_-\cdot\partial_+\psi_-\end{aligned} \tag{15}$$

where we used in the second step that since the ψ are Majorana spinors, we have

$$\bar{\psi}^\mu = \psi^\dagger\gamma^0 = \psi^{\mathrm{T}}\gamma^0 = (\psi_+,\psi_-)\begin{pmatrix}0&1\\-1&0\end{pmatrix} = (-\psi_-,\psi_+). \tag{16}$$

Inserting eqs. (14) and (15) into eq. (3), we obtain the RNS action in lightcone coordinates,

$$\begin{aligned}S_{\mathrm{RNS}}[\boldsymbol{X},\psi] &= -\frac{1}{16\pi}\int_\Sigma\Big(\frac{1}{2}\,\mathrm{d}\xi^+\,\mathrm{d}\xi^-\Big)\Big[\frac{2}{\alpha'}(-4\partial_+\boldsymbol{X}\cdot\partial_-\boldsymbol{X}) + 2i(-2\psi_+\cdot\partial_-\psi_+ - 2\psi_-\cdot\partial_+\psi_-)\Big]\\ &= \frac{1}{8\pi}\int_\Sigma \mathrm{d}\xi^+\,\mathrm{d}\xi^-\Big[\frac{2}{\alpha'}\partial_+\boldsymbol{X}\cdot\partial_-\boldsymbol{X} + i(\psi_+\cdot\partial_-\psi_+ + \psi_-\cdot\partial_+\psi_-)\Big],\end{aligned} \tag{17}$$

> **Note:** Bosons and fermions have mass dimensions $[X]=-1$ and $[\psi]=\frac{1}{2}$, respectively, explaining the relative factor of $\frac{1}{\alpha'}$. Also, the objects $\psi_\pm$ are Majorana-Weyl spinors, meaning they are both real and chiral, where chiral in this case refers to having a definite eigenvalue of ±1 w.r.t. the operator $\gamma\equiv\gamma^0\gamma^1$. Such Majorana-Weyl spinors exist only in $2 \bmod 8$ dimensions.

Since to obtain the RNS action (3), we simply added the canonical kinetic term for Majorana fermions to that of the free boson, the bosonic e.o.m. remains unchanged,

$$\frac{\delta S_{\mathrm{RNS}}}{\delta\boldsymbol{X}} = -\frac{1}{2\pi\alpha'}\,\partial_+\partial_-\boldsymbol{X} \overset{!}{=} 0. \tag{18}$$

On-shell fermions, on the other hand, are governed by the Dirac equation $\gamma^a\partial_a\psi=0$, which i.t.o. of the Majorana-Weyl spinors reads,

$$\frac{\delta S_{\mathrm{RNS}}}{\delta\psi_+} = \frac{i}{4\pi}\,\partial_-\psi_+ \overset{!}{=} 0, \qquad \frac{\delta S_{\mathrm{RNS}}}{\delta\psi_-} = \frac{i}{4\pi}\,\partial_+\psi_- \overset{!}{=} 0, \tag{19}$$

Thus the $\psi_\pm$ are chiral also in the sense that they are functions of $\xi^\pm$ only.

We now have all the tools to show that the RNS action is invariant under the combined transformation of eqs. (5) and (6). Broken into chiral and antichiral components, these read

$$\delta\boldsymbol{X} = i\sqrt{\frac{\alpha'}{2}}\,\bar{\epsilon}\psi \overset{(16)}{=} i\sqrt{\frac{\alpha'}{2}}\,(-\epsilon_-,\epsilon_+)\begin{pmatrix}\psi_+\\\psi_-\end{pmatrix} = i\sqrt{\frac{\alpha'}{2}}\,(\epsilon_+\psi_- - \epsilon_-\psi_+), \tag{20}$$

[1] $\boldsymbol{X}=(X^0,\ldots,X^{25})$ and $\psi=(\psi^0,\ldots,\psi^{25})$ denote the entire bosonic and fermionic spacetime vectors, respectively.

$$\begin{aligned}\delta\boldsymbol{\psi} = \begin{pmatrix}\delta\boldsymbol{\psi}_+\\ \delta\boldsymbol{\psi}_-\end{pmatrix} &= \frac{1}{2}\sqrt{\frac{2}{\alpha'}}\,\gamma^a\partial_a\boldsymbol{X}\epsilon = \frac{1}{2}\sqrt{\frac{2}{\alpha'}}\,(\gamma^0\partial_\tau + \gamma^1\partial_\sigma)\boldsymbol{X}\begin{pmatrix}\epsilon_+\\ \epsilon_-\end{pmatrix}\\ &= \frac{1}{2}\sqrt{\frac{2}{\alpha'}}\left[\begin{pmatrix}0 & 1\\ -1 & 0\end{pmatrix}\partial_\tau + \begin{pmatrix}0 & 1\\ 1 & 0\end{pmatrix}\partial_\sigma\right]\boldsymbol{X}\begin{pmatrix}\epsilon_+\\ \epsilon_-\end{pmatrix} = \sqrt{\frac{2}{\alpha'}}\begin{pmatrix}+\epsilon_-\partial_+\boldsymbol{X}\\ -\epsilon_+\partial_-\boldsymbol{X}\end{pmatrix}.\end{aligned} \tag{21}$$

Before inserting these into the action (17), we spell out the chirality condition $\gamma^b\gamma^a\partial_b\epsilon(\xi) = 0$ in components,

$$\gamma^b\gamma^0\partial_b\epsilon = (\underbrace{\gamma^0\gamma^0}_{-\left(\begin{smallmatrix}1&0\\0&1\end{smallmatrix}\right)}\partial_\tau + \underbrace{\gamma^1\gamma^0}_{\left(\begin{smallmatrix}-1&0\\0&1\end{smallmatrix}\right)}\partial_\sigma)\epsilon = -\begin{pmatrix}\partial_\tau+\partial_\sigma & 0\\ 0 & \partial_\tau-\partial_\sigma\end{pmatrix}\begin{pmatrix}\epsilon_+\\ \epsilon_-\end{pmatrix} = -2\begin{pmatrix}\partial_+\epsilon_+\\ \partial_-\epsilon_-\end{pmatrix} = 0, \tag{22}$$

i.e. $\epsilon_\pm$ depends only on $\xi^\mp$. To first order in ϵ and after integrating by parts (dropping boundary terms), the bosonic part of the action changes by

$$\delta S_{\mathrm{B}} = \frac{1}{4\pi\alpha'}\int_\Sigma \mathrm{d}\xi^+\,\mathrm{d}\xi^-(\partial_+\delta\boldsymbol{X}\cdot\partial_-\boldsymbol{X} + \partial_+\boldsymbol{X}\cdot\partial_-\delta\boldsymbol{X}) = -\frac{1}{2\pi\alpha'}\int_\Sigma \mathrm{d}\xi^+\,\mathrm{d}\xi^-\delta\boldsymbol{X}\cdot\partial_+\partial_-\boldsymbol{X}. \tag{23}$$

For the anticommuting fermions, an integration by parts gives $\int\boldsymbol{\psi}_+\cdot\partial_-\delta\boldsymbol{\psi}_+ = -\int\partial_-\boldsymbol{\psi}_+\cdot\delta\boldsymbol{\psi}_+ = \int\delta\boldsymbol{\psi}_+\cdot\partial_-\boldsymbol{\psi}_+$ (likewise for $\boldsymbol{\psi}_-$), so that

$$\begin{aligned}\delta S_{\mathrm{F}} &= \frac{i}{4\pi}\int_\Sigma \mathrm{d}\xi^+\,\mathrm{d}\xi^-(\delta\boldsymbol{\psi}_+\cdot\partial_-\boldsymbol{\psi}_+ + \delta\boldsymbol{\psi}_-\cdot\partial_+\boldsymbol{\psi}_-)\\ &\overset{(21)}{=} \frac{i}{4\pi}\sqrt{\frac{2}{\alpha'}}\int_\Sigma \mathrm{d}\xi^+\,\mathrm{d}\xi^-(\epsilon_-\partial_+\boldsymbol{X}\cdot\partial_-\boldsymbol{\psi}_+ - \epsilon_+\partial_-\boldsymbol{X}\cdot\partial_+\boldsymbol{\psi}_-)\\ &= \frac{i}{4\pi}\sqrt{\frac{2}{\alpha'}}\int_\Sigma \mathrm{d}\xi^+\,\mathrm{d}\xi^-(\epsilon_+\boldsymbol{\psi}_- - \epsilon_-\boldsymbol{\psi}_+)\cdot\partial_+\partial_-\boldsymbol{X} \overset{(20)}{=} \frac{1}{2\pi\alpha'}\int_\Sigma \mathrm{d}\xi^+\,\mathrm{d}\xi^-\delta\boldsymbol{X}\cdot\partial_+\partial_-\boldsymbol{X},\end{aligned} \tag{24}$$

where in the last line we integrated by parts once more and used the chirality condition (22), $\partial_-\epsilon_- = \partial_+\epsilon_+ = 0$, so that no derivatives of ϵ appear.

Adding eqs. (23) and (24), the two variations cancel exactly, $\delta S_{\mathrm{RNS}} = \delta S_{\mathrm{B}} + \delta S_{\mathrm{F}} = 0$. The complete action thus indeed features supersymmetry,

$$S_{\mathrm{RNS}} \xrightarrow[(6)]{(5)} S'_{\mathrm{RNS}} = S_{\mathrm{RNS}}. \tag{25}$$

(We did not even need the equations of motion (18) and (19); the chirality condition alone suffices.)

e) The boundary conditions stated in eq. (7) are those of the closed string. This is intuitively clear: If the string is closed then the points $\sigma = 0$ and $\sigma = l$ are exactly the same, hence the string field evaluated at this point must be the same too.

If the fermionic string is closed, i.e. periodic in σ with period l, then it obviously has to fulfill

$$\boldsymbol{\psi}_\pm(\sigma) \overset{!}{=} \boldsymbol{\psi}_\pm(\sigma + l). \tag{26}$$

This is not the whole story, however. Since we are dealing with the fermionic string here, which is a worldsheet spinor, it may be that we pick up a minus sign by walking once around the string, $\sigma \to \sigma + l$,

$$\boldsymbol{\psi}_\pm(\sigma) \overset{!}{=} \pm\boldsymbol{\psi}_\pm(\sigma + l). \tag{27}$$

This is an entirely new possibility that we did not encounter with the bosonic string.

Looking at eq. (27), it is clear that we now face four possible combinations of boundary conditions, both $\boldsymbol{\psi}_+$ and $\boldsymbol{\psi}_-$ can be periodic or antiperiodic, and they each lead to different mode expansions.[2] Rewriting eq. (27) as

$$\boldsymbol{\psi}_\pm(\sigma + l) \overset{!}{=} e^{2\pi i \varphi_\pm} \boldsymbol{\psi}_\pm(\sigma), \tag{28}$$

we define

- $\varphi_\pm = 0$ as the Ramond sector, and
- $\varphi_\pm = \frac{1}{2}$ as the Neveu-Schwarz sector.

The Ramond sector has strictly periodic boundary conditions and must hence be integer moded with a string expansion of the form

$$\boldsymbol{\psi}_\pm(\xi^\pm) = \sqrt{\frac{2\pi}{l}} \sum_{n\in\mathbb{Z}} \boldsymbol{b}_n^\pm e^{-\frac{2\pi}{l} in\xi^\pm}. \tag{29}$$

The Neveu-Schwarz sector is antiperiodic which leads to a half-integer moded string expansion,

$$\boldsymbol{\psi}_\pm(\xi^\pm) = \sqrt{\frac{2\pi}{l}} \sum_{n\in\mathbb{Z}+\frac{1}{2}} \boldsymbol{b}_n^\pm e^{-\frac{2\pi}{l} in\xi^\pm}. \tag{30}$$

f) The following table gives the statistics of each of the four sectors.

φ_+	φ_-	sector	statistics
0	0	R-R	bosonic
0	1/2	R-NS	fermionic
1/2	0	NS-R	fermionic
1/2	1/2	NS-NS	bosonic

In the RNS formalism, the NS sector gives spacetime bosons and the R sector spacetime fermions. Note that the R-R sector is thus doubly fermionic, which results in overall bosonic statistics.

2 Operator Product Expansion

Consider a conformal field theory with free fields ψ in two dimensions with a chiral dependence on z and an energy-momentum tensor $T(z) = \alpha\mathcal{N}[\psi(z)\partial_z\psi(z)]$, with $\alpha \in \mathbb{R}$.
The two-point function is given by

$$\langle\psi(z)\psi(w)\rangle = \frac{\kappa}{z-w}, \qquad \kappa \in \mathbb{R}. \tag{31}$$

a) Use Wick's theorem to show that for an appropriate $\alpha\kappa$, the OPE $T(z)\psi(w)$ is given by

$$\mathcal{R}[T(z)\psi(w)] = \frac{h\psi(w)}{(z-w)^2} + \frac{\partial_w\psi(w)}{z-w} + (\text{terms non-singular at } z = w) \tag{32}$$

and determine the constant h.

b) What is the conformal dimension of ψ? Is ψ a primary or a quasi-primary field?

c) How does ψ transform under $z \to f(z)$, where f is a conformal transformation?

[2] Of course, the two components of the supersymmetry parameter ϵ have to be chosen such that $\delta\boldsymbol{X} \propto \bar{\epsilon}\boldsymbol{\psi}$ is periodic.

a) Since $\langle\psi(w)\psi(z)\rangle = \frac{\kappa}{w-z} = -\langle\psi(z)\psi(w)\rangle$, the field ψ is fermionic (anticommuting). By Wick's theorem, we have

$$\begin{aligned}\mathcal{R}[T(z)\psi(w)] &= \alpha\mathcal{R}[\mathcal{N}[\psi(z)\partial_z\psi(z)]\psi(w)] \\ &\overset{\text{W.T.}}{=} \alpha[\underbrace{\mathcal{N}[\psi(z)\partial_z\psi(z)\psi(w)]}_{\text{non-singular at } z=w} - \underbrace{\langle\psi(z)\psi(w)\rangle}_{\frac{\kappa}{z-w}}\underbrace{\partial_z\psi(z)}_{\partial_w\psi(w)+\mathcal{O}(z-w)} \\ &\qquad + \underbrace{\langle\partial_z\psi(z)\psi(w)\rangle}_{-\frac{\kappa}{(z-w)^2}}\underbrace{\psi(z)}_{\psi(w)+\partial_w\psi(w)(z-w)+\mathcal{O}[(z-w)^2]}] \\ &= -\alpha\kappa\frac{\psi(w)}{(z-w)^2} - 2\alpha\kappa\frac{\partial_w\psi(w)}{z-w} + (\text{terms non-singular at } z=w),\end{aligned} \tag{33}$$

where the minus sign in front of the first contraction arises from anticommuting $\psi(w)$ past $\partial_z\psi(z)$, and the self-contraction $\langle\mathcal{N}[\psi(z)\partial_z\psi(z)]\rangle = 0$ vanishes by normal ordering. Thus for $\alpha\kappa = -\frac{1}{2}$, we reproduce eq. (32), which makes $h = \frac{1}{2}$.

b) As we just derived in eq. (33), ψ has conformal dimension $h = \frac{1}{2}$. Equation (33) also identifies $\psi(w)$ as a (chiral) primary since only primaries feature a product expansion of this form with the energy-momentum tensor. (This is the free Majorana-Weyl fermion of the RNS superstring.)

c) Under a conformal transformation $z \to f(z)$, the primary $\psi(z)$ transforms as

$$\psi(z) \to \psi'(z') = \left(\frac{\partial f(z)}{\partial z}\right)^{-\frac{1}{2}}\psi(z). \tag{34}$$

3 Bosonic string in $D = 26$ dimensions

Assume a lightcone-gauged open string with

$$\left.\begin{matrix}\text{NN}\\ \text{DD}\\ \text{ND}\\ \text{DN}\end{matrix}\right\} \text{ boundary conditions in dimensions } \begin{cases}\{X^+, X^-, X^i \mid i \in I\} & \text{with } |I| = n_{\text{NN}},\\ \{X^j \mid j \in J\} & \text{with } |J| = n_{\text{DD}},\\ \{X^k \mid k \in K\} & \text{with } |K| = n_{\text{ND}},\\ \{X^l \mid l \in L\} & \text{with } |L| = n_{\text{DN}},\end{cases} \tag{35}$$

and

$$L_m \equiv \frac{1}{2}\sum_{n=-\infty}^{\infty}\mathcal{N}(\boldsymbol{\alpha}_{m-n}\cdot\boldsymbol{\alpha}_n). \tag{36}$$

a) Show that

$$L_0 = \frac{1}{2}\boldsymbol{\alpha}_0^2 + \sum_{n=1}^{\infty}\boldsymbol{\alpha}_{-n}\cdot\boldsymbol{\alpha}_n. \tag{37}$$

b) Use the physical state condition to show that the mass condition is given by

$$M^2 = \frac{1}{\alpha'}(N_{\text{NN}} + N_{\text{DD}} + N_{\text{ND}} + N_{\text{DN}} - a) + T^2\sum_{j\in J}\left(x_l^j - x_0^j\right)^2, \tag{38}$$

where N_{xy}, $x, y \in \{N, D\}$ are the number operators of subsections, $T = \frac{1}{2\pi\alpha'}$ is the string tension, and x_0^j, x_l^j are the endpoints of the string in DD dimensions.
You can use

$$\alpha_0^i = \sqrt{2\alpha'}p^i, \qquad \alpha_0^j = \frac{1}{\sqrt{2\pi^2\alpha'}}\left(x_l^j - x_0^j\right), \tag{39}$$

and recall that

$$a = \frac{n_{\mathrm{NN}} + n_{\mathrm{DD}}}{24} - \frac{n_{\mathrm{ND}} + n_{\mathrm{DN}}}{48} \tag{40}$$

where n_{xy}, $x, y \in \{N, D\}$ are the number of dimensions excluding $X^{\pm}$ with the indexed combination of boundary conditions.

Consider one space-filling D25-brane, seven D9-branes in dimensions $\{0, ..., 9\}$ and eleven D17-branes in $\{0, ..., 4, 10, ..., 22\}$ such that the distance of the orthogonal dimensions between the D9- and D17-branes is different from zero.

c) What are the gauge groups living on the D9-/D17-stacks?

d) Find the 7 different types of massless states in the open string spectrum, their Chan-Paton factors and the representation of the abelian brane gauge group transformation.

a) Normal ordering is defined as

$$\mathcal{N}(\alpha_m^\mu \alpha_n^\nu) = \begin{cases} \alpha_m^\mu \alpha_n^\nu & \text{for } m \leq n, \\ \alpha_n^\nu \alpha_m^\mu & \text{for } n < m. \end{cases} \tag{41}$$

We can therefore rewrite the level-zero Virasoro generator as follows,

$$\begin{aligned} L_0 &= \frac{1}{2}\boldsymbol{\alpha}_0^2 + \frac{1}{2}\sum_{n=-\infty}^{-1} \mathcal{N}(\boldsymbol{\alpha}_{-n} \cdot \boldsymbol{\alpha}_n) + \frac{1}{2}\sum_{n=1}^{\infty} \mathcal{N}(\boldsymbol{\alpha}_{-n} \cdot \boldsymbol{\alpha}_n) \\ &= \frac{1}{2}\boldsymbol{\alpha}_0^2 + \frac{1}{2}\sum_{n=-\infty}^{-1} \boldsymbol{\alpha}_n \cdot \boldsymbol{\alpha}_{-n} + \frac{1}{2}\sum_{n=1}^{\infty} \boldsymbol{\alpha}_{-n} \cdot \boldsymbol{\alpha}_n \\ &= \frac{1}{2}\boldsymbol{\alpha}_0^2 + \sum_{n=1}^{\infty} \boldsymbol{\alpha}_{-n} \cdot \boldsymbol{\alpha}_n. \end{aligned} \tag{42}$$

b) The mass shell[3] condition (38) is a result of the Virasoro constraints[4]

$$L_m \overset{!}{=} 0, \qquad \forall m \in \mathbb{Z}. \tag{43}$$

Note: The Virasoro constraints in turn followed from the fact that the Virasoro generators are precisely the Fourier modes of the energy-momentum tensor T_{ab} and it, due to its definition

$$T_{ab} \equiv \frac{4\pi}{\sqrt{-h}} \frac{\delta S_{\mathrm{P}}}{\delta h^{ab}} \overset{!}{=} 0, \tag{44}$$

must vanish on-shell after use of Hamilton's principle.

Equation (43) is a classical expression. When moving to the quantized theory, it must be implemented as the operator equation

$$\left(L_m - a\delta_{m,0}\right)|\varphi\rangle = 0, \qquad \forall m \geq 0 \wedge |\varphi\rangle \in \mathcal{H}_{\mathrm{phys}}, \tag{45}$$

[3]Note that the word shell is important here since eq. (38) only holds on-shell, i.e. upon use of the equations of motion of the worldsheet metric h^{ab}.

[4]In the open string sector, no $\tilde{L}_m$ appears since left- and right-moving oscillations on the string are reflected into each other at the endpoints by the boundary conditions.

where $\mathcal{H}_{\text{phys}}$ denotes the Hilbert space of physical quantum states. Indeed, $\big(L_m - a\delta_{m,0}\big)|\varphi\rangle = 0$ implies $\langle\varphi|\big(L_m - a\delta_{m,0}\big)|\varphi\rangle = 0\ \forall m \in \mathbb{Z}$.

To derive the mass shell condition from eq. (45), we are interested in the $m = 0$-case, $(L_0 - a)|\varphi\rangle = 0$. Recalling our result from part a), we can rewrite L_0 as

$$\begin{aligned} L_0 &= \frac{1}{2}\boldsymbol{\alpha}_0^2 + \sum_{n>0}^{\infty} \boldsymbol{\alpha}_{-n}\cdot\boldsymbol{\alpha}_n \overset{(39)}{=} \frac{1}{2}\left(2\alpha' \sum_{i\in I}\big(p^i\big)^2 + \sum_{j\in J}\frac{\big(x_l^j - x_0^j\big)^2}{2\pi^2\alpha'}\right) \\ &\quad + \sum_{n=1}^{\infty}\left(\sum_{i\in I}\alpha_{-n}^i\alpha_n^i + \sum_{j\in J}\alpha_{-n}^j\alpha_n^j\right) + \sum_{n\in\mathbb{N}_0+\frac{1}{2}}\left(\sum_{k\in K}\alpha_{-n}^k\alpha_n^k + \sum_{l\in L}\alpha_{-n}^l\alpha_n^l\right) \\ &= \alpha'\boldsymbol{p}^2 + \frac{T}{2\pi}\sum_{j\in J}\big(x_l^j - x_0^j\big)^2 + N_{\text{NN}} + N_{\text{DD}} + N_{\text{ND}} + N_{\text{DN}}. \end{aligned} \tag{46}$$

By solving the level-zero constraint $(L_0 - a)|\varphi\rangle = 0$ for the invariant mass $M^2 = -\boldsymbol{p}^2$, we get

$$\begin{aligned} (L_0 - a)|\varphi\rangle &= \left(-\alpha' M^2 + \frac{T}{2\pi}\sum_{j\in J}\big(x_l^j - x_0^j\big)^2 + N_{\text{NN}} + N_{\text{DD}} + N_{\text{ND}} + N_{\text{DN}} - a\right)|\varphi\rangle \overset{!}{=} 0, \\ \Rightarrow\quad M^2 &= \frac{1}{\alpha'}\left(N_{\text{NN}} + N_{\text{DD}} + N_{\text{ND}} + N_{\text{DN}} - a\right) + T^2\sum_{j\in J}\big(x_l^j - x_0^j\big)^2. \end{aligned} \tag{47}$$

c) The permeation of space by the above mentioned arrangement of D-branes may be visualised with the following table.

d	0	1	2	3	4	5	6	7	8	9	10	11	12	13	14	15	16	17	18	19	20	21	22	23	24	25
D25	1	1	1	1	1	1	1	1	1	1	1	1	1	1	1	1	1	1	1	1	1	1	1	1	1	1
D9	7	7	7	7	7	7	7	7	7	7																
D17	11	11	11	11	11						11	11	11	11	11	11	11	11	11	11	11	11	11			

Since a stack of N coincident D-branes hosts a $U(N)$ gauge theory, the gauge group living on the D9-stack is a $U(7)$, whereas the D17-stack carries a $U(11)$.

d) There are three different types of D-branes present and each open string has two ends, hence there are a total of $3 \cdot 3 = 9$ combinations of boundary conditions possible. Each combination has its own set of string states. Which ones are massless depends on

1. the set's normal ordering constant a given by eq. (40), which can be rewritten as

$$a = \frac{\overbrace{n_{\text{NN}} + n_{\text{DD}} + n_{\text{ND}} + n_{\text{DN}}}^{D-2}}{24} - \frac{n_{\text{ND}} + n_{\text{DN}}}{16} = 1 - \frac{n_{\text{ND}} + n_{\text{DN}}}{16}, \tag{48}$$

2. the state's excitation level $n \in \mathbb{N}_0$, i.e. its eigenvalue w.r.t. the number operator N, and
3. the separation of branes $\Delta x^j = x_l^j - x_0^j$ in Dirichlet dimensions.

Let's consider each combination of boundary conditions in turn.

1. **D25-D25 strings** have Neumann boundary conditions in all dimensions, hence $a = 1$ and the mass is zero if

$$M^2|\varphi\rangle = \frac{1}{\alpha'}(N_{\text{NN}} - 1)|\varphi\rangle \overset{!}{=} 0, \qquad \text{i.e. for} \quad N_{\text{NN}}|\varphi\rangle = |\varphi\rangle. \tag{49}$$

Any state fulfilling eq. (49) must be of the form

$$|\varphi\rangle = \sum_{i=1}^{24} A_i\alpha_{-1}^i|0,\boldsymbol{p}\rangle, \tag{50}$$

where we did not have to write any Chan-Paton factors because the D25 is a solitary brane. The A_i form a gauge field, i.e. a massless transverse vector that transforms in the fundamental representation of $SO(24)$.[5]

2. & 3. **D9-D9 strings** have
   - Neumann boundary conditions in dimensions $X^\pm = \frac{1}{\sqrt{2}}(X^0 \pm X^1)$ and X^i, $i \in I = \{2, 3, ..., 9\}$, and
   - Dirichlet boundary conditions in dimensions X^j, $j \in J = \{10, 11, ..., 25\}$.

   Since $n_{\text{ND}} = n_{\text{DN}} = 0$, we still have $a = 1$. The branes are all coincident, $\Delta x^j = 0$, so there is no mass contribution from tension. The mass vanishes if

$$M^2|\varphi\rangle = \frac{1}{\alpha'}(N_{\text{NN}} + N_{\text{DD}} - 1)|\varphi\rangle \stackrel{!}{=} 0. \tag{51}$$

   There are two possibilities here. Since N_{NN} and N_{DD} take eigenvalues in $\mathbb{N}_0$, we have either one excitation parallel or one orthogonal to the branes. The corresponding state with Chan-Paton factors r, s can be written as

$$|\varphi\rangle = \sum_{r,s=1}^{7} \left(\sum_{i=2}^{9} \boldsymbol{A}_i^{rs} \alpha_{-1}^i + \sum_{j=10}^{25} \boldsymbol{\varphi}_j^{rs} \alpha_{-1}^j \right) |0, \boldsymbol{p}, rs\rangle, \tag{52}$$

   where the parallel excitations $\boldsymbol{A}_i^{rs}$ form a set of $7^2 = 49$ massless vector bosons (i is the vector index) that transform under the adjoint representation of the $U(7)$ gauge group hosted by the coincident D9-branes.[6] The orthogonal excitations $\boldsymbol{\varphi}_j^{rs}$ form 49 sets of $n_{\text{DD}} = 16$ scalars each (since $j \in \{10, ..., 25\}$) that transform under the adjoint of $U(7)$. These are the Goldstone bosons associated with spontaneous breaking of the 26-dimensional Poincaré symmetry by the D9-branes.

4. & 5. **D17-D17 strings** have
   - Neumann boundary conditions in dimensions $X^\pm$ and X^i, $i \in I = \{2, 3, 4, 10, 11, ..., 22\}$, and
   - Dirichlet boundary conditions in dimensions X^j, $j \in J = \{5, 6, 7, 8, 9, 23, 24, 25\}$.

   Also, $a = 1$ and $\Delta x^j = 0$. The mass again vanishes if

$$M^2|\varphi\rangle = \frac{1}{\alpha'}(N_{\text{NN}} + N_{\text{DD}} - 1)|\varphi\rangle \stackrel{!}{=} 0, \tag{53}$$

   so the state can be written in the same way as eq. (52) with some slight modifications,

$$|\varphi\rangle = \sum_{r,s=1}^{11} \left(\sum_{i \in I} \boldsymbol{A}_i^{rs} \alpha_{-1}^i + \sum_{j \in J} \boldsymbol{\varphi}_j^{rs} \alpha_{-1}^j \right) |0, \boldsymbol{p}, rs\rangle. \tag{54}$$

   The $\boldsymbol{A}_i^{rs}$ now form a set of $11^2 = 121$ massless vector bosons that transform in the adjoint representation of the $U(11)$ gauge group living on the coincident D17-branes. The orthogonal excitations $\boldsymbol{\varphi}_j^{rs}$ form 121 sets of $n_{\text{DD}} = 8$ scalars each that transform under the adjoint representation of $U(11)$.

6. **D25-D9 (D9-D25) strings** have

[5] Note that $SO(24)$ is not brane gauge group here but one living in regular spacetime. Hence the transformation behavior we stated refers to how the A_i transform as a spacetime vector.

[6] Note that the $\boldsymbol{A}_i^{rs}$ now serve two purposes: Just like in eq. (50), they still form a spacetime vector. In addition, they are also N^2 $N \times N$-matrices (which we indicate by using boldface), one for every combination of Chan-Paton factors r and s. These matrices span the Lie algebra of the $U(N)$ gauge group brought into being by the coincident branes. In our case, $N = 7$ due to the 7 coincident D9 branes.

- Neumann boundary conditions in dimensions $X^{\pm}$ and X^i, $i \in I = \{2, 3, ..., 9\}$, and
- mixed Neumann-Dirichlet (Dirichlet-Neumann) boundary conditions in dimensions $X^{k(l)}$, $k(l) \in K(L) = \{10, 11, ..., 25\}$.

Inserting $n_{\text{ND}} + n_{\text{DN}} = 16$ into eq. (48), we get a normal ordering constant of $a = 1 - \frac{16}{16} = 0$. Without DD dimensions, there is no tension contribution, so the mass $M^2 = \frac{N}{\alpha'}$ vanishes already for the ground state,

$$|\varphi\rangle = \sum_{r(s)=1}^{7} \lambda^{r(s)} |0, \boldsymbol{p}, r(s)\rangle. \tag{55}$$

Since only one end of the string sits on the D9-stack, the state carries a single Chan-Paton factor. These massless scalars transform in the (anti-)fundamental representation of $U(7)$ and are charged under the $U(1)$ of the D25-brane.

7. **D25-D17 (D17-D25) strings** have
   - Neumann boundary conditions in dimensions $X^{\pm}$ and X^i, $i \in I = \{2, 3, 4, 10, 11, ..., 22\}$, and
   - mixed Neumann-Dirichlet (Dirichlet-Neumann) boundary conditions in dimensions $X^{k(l)}$, $k(l) \in K(L) = \{5, 6, 7, 8, 9, 23, 24, 25\}$.

   Inserting $n_{\text{ND}} + n_{\text{DN}} = 8$ into eq. (48), we get a normal ordering constant of $a = 1 - \frac{8}{16} = \frac{1}{2}$. The ground state is thus tachyonic, but the first half-integer excitation in an ND (DN) direction, $N = \frac{1}{2}$, is massless,

$$|\varphi\rangle = \sum_{r(s)=1}^{11} \sum_{k(l) \in K(L)} \psi_{k(l)}^{r(s)} \alpha_{-\frac{1}{2}}^{k(l)} |0, \boldsymbol{p}, r(s)\rangle. \tag{56}$$

   These are $n_{\text{ND}} = 8$ massless scalars in the (anti-)fundamental representation of $U(11)$, again charged under the $U(1)$ of the D25-brane.

– **D9-D17 (D17-D9) strings** have
   - Neumann boundary conditions in dimensions $X^{\pm}$ and X^i, $i \in I = \{2, 3, 4\}$,
   - Dirichlet boundary conditions in dimensions X^j, $j \in J = \{23, 24, 25\}$, and
   - mixed boundary conditions in the $n_{\text{ND}} + n_{\text{DN}} = 5 + 13 = 18$ dimensions $X^5, ..., X^{22}$.

   This gives a normal ordering constant of $a = 1 - \frac{18}{16} = -\frac{1}{8}$, so that

$$M^2 = \frac{1}{\alpha'} \left(N_{\text{NN}} + N_{\text{DD}} + N_{\text{ND}} + N_{\text{DN}} + \frac{1}{8} \right) + T^2 \sum_{j \in J} \left(\Delta x^j\right)^2 > 0. \tag{57}$$

   Since all terms are non-negative and the stretching contribution is non-zero, there are no massless states in this sector. The lightest states are massive and transform in the (anti-)bifundamental representation of $U(7) \times U(11)$.

4 Scattering Amplitude for the Bosonic String

a) State the worldsheet topology for the vacuum diagram of the oriented open and closed strings at tree- and one-loop-level. Name their corresponding Euler characteristics, too.

b) The S-matrix describing the scattering of n string states can be written as

$$S_{j_1,...,j_n}(k_1, ..., k_n) = \sum_{\substack{\text{compact} \\ \text{topologies}}} \frac{\int \mathcal{D}X \int \mathcal{D}h}{\text{Vol}_{\text{Diff} \times \text{Weyl}}} e^{-S_{\text{P}} - \lambda\chi} \prod_{i=1}^{n} V_{j_i}(k_i) \tag{58}$$

Briefly describe the purpose of each term.

c) Which mechanisms protect oriented closed and open strings from UV divergences in the one-loop vacuum amplitudes?

a) When calculating scattering amplitudes via the path integral, we must sum over all possible worldsheet topologies. To characterize the types of worldsheets that have to be considered at each level of its perturbative expansion, string theory makes use of the following theorem:

> **Theorem:** Every compact, connected, oriented two-dimensional manifold is topologically equivalent to a sphere with g handles (g for genus) and b boundaries. A topological invariant of two-dimensional oriented surfaces is the Euler characteristic $\chi = 2 - 2g - b$.

What this boils down to is that we can obtain the topological characteristics of higher and higher loop-level worldsheet topologies by successively increasing in one-step increments the number of handles g in case of the closed string and the number of boundaries b for the open sector. We thus get the following topologies for the vacuum diagram of the two sectors up to one-loop level:

sector	order	topology	(g, b)	Euler char.
open string	tree-level	disk $\mathbb{D}^2$	$(0, 1)$	$\chi = 1$
	one-loop	cylinder $\mathbb{C}^2$	$(0, 2)$	$\chi = 0$
closed string	tree-level	sphere $\mathbb{S}^2$	$(0, 0)$	$\chi = 2$
	one-loop	torus $\mathbb{T}^2$	$(1, 0)$	$\chi = 0$

Tree-level and one-loop vacuum amplitude

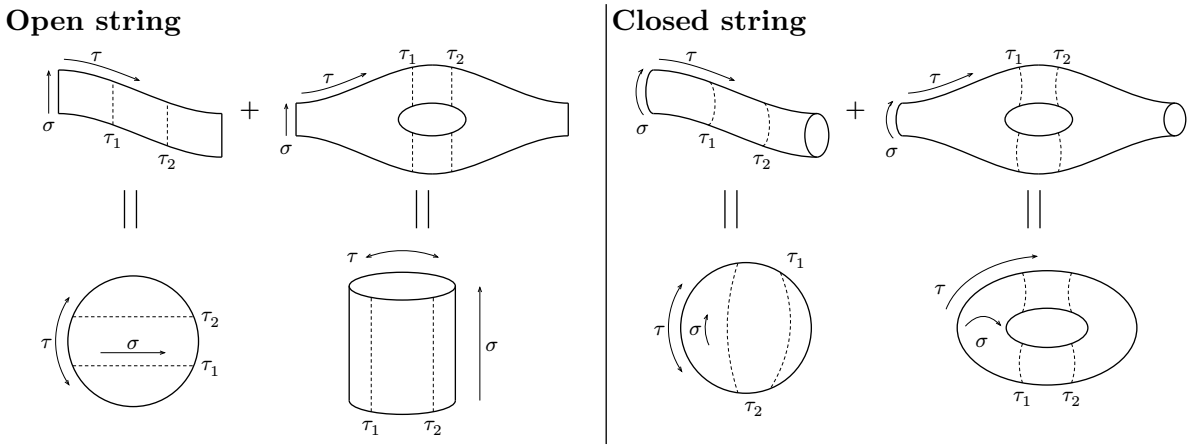

b) We will briefly explain what each of the operations in eq. (58) are for.

- The sum over compact worldsheet topologies serves the purpose of incorporating contributions to a given scattering process at all loop levels.[7]
- The path integrals $\int \mathcal{D}X \int \mathcal{D}h$ take into account all possible intermediate configurations that converge for $\tau \to \mp\infty$ to the specified asymptotic in- and outgoing states of both the string field $X^\mu(\tau, \sigma)$ and the worldsheet metric $h^{ab}(\tau, \sigma)$.[8]
- The denominator $\mathrm{Vol}_{\mathrm{Diff} \times \mathrm{Weyl}}$ is required to avoid the standard problem in the path integral quantization of gauge theories, i.e. overcounting of gauge equivalent configurations. The solution is always to factorize the path integral into an integral over physical degrees of freedom and over the gauge parameters. The latter can then be cancelled by dividing by

[7] While eq. (58) is formally exact, the practical need to truncate the sum over topologies means we end up with only a perturbative approximation.

[8] $h^{ab}(\tau, \sigma)$ describes the exact shape and curvature of the worldsheet for a given topology.

the volume of the gauge group. In the case at hand, this can be achieved by converting the integral over all worldsheet metrics into an integral over all diffeomorphisms $\epsilon^a(\tau, \sigma)$ and Weyl rescalings $\Lambda(\tau, \sigma)$ that take us to the gauge transformed h' starting from some fixed reference metric $\hat{h}$.

- $e^{-S_{\mathrm{P}}-\lambda\chi}$ is a weighting factor. The first part $e^{-S_{\mathrm{P}}}$ weighs string and worldsheet configurations to ensure that configurations that are more likely to occur have a higher contribution to the path integral. $e^{-\lambda\chi}$ on the other hand contains the aforementioned Euler characteristic χ. Unlike the Polyakov action $S_{\mathrm{P}}[X]$, it has no dynamics of its own but merely serves to weigh the contribution of different worldsheets to the overall S-matrix.
- Finally, the product of vertex operators $\prod_{i=1}^{n} V_{j_i}(k_i)$ serves to specify the in and out states, i.e. what type and number of particles are inserted at $\tau = -\infty$ and what we want to end up with at $\tau = \infty$. This is the only part of the S-matrix that actually contains information about what type of scattering process we are looking at.

c) In point particle theories the sharp localization of the interaction vertex is responsible for the appearance of divergent amplitudes. In string theory, no localized vertices are present. Instead, interactions are mediated via the global worldsheet topology.

More specifically, at the one-loop level, string theory's ultraviolet behavior benefits from a feature called **modular invariance**, which on the torus is invariance under $PSL(2, \mathbb{Z})$ transformations $\tau \to \frac{a\tau+b}{c\tau+d}$ of the modular parameter τ. Restricting the moduli integral to the fundamental domain excludes the region $\tau \to 0$ of short worldsheet tori that would correspond to the UV divergence of analogous point particle theories, so modular invariance acts as an intrinsic ultraviolet cutoff for the closed string. For the open string, the one-loop cylinder amplitude can be reinterpreted via open-closed worldsheet duality as tree-level closed string exchange, so its would-be UV divergence turns into an IR divergence in the dual closed string channel.